Machine Features:

Linear Scale (Optional)
The X, Z-axes are available to be equipped with a linear scale, providing closed loop feedback control.

HYDRAULIC POWER UNIT
- The hydraulic power unit delivers high pressure to two hydraulic cylinders controlling beam elevation.
- The hydraulic power unit consists of high quality hydraulic parts, providing stable motion control and long service life.

Air Conditioner for Electric Cabinet
The electric cabinet is equipped with an air conditioner to achieve best possible heat dissipation and stable working temperature; therefore, the electric components have extended lifetime.

DEPENDABLE CONTROL PERFORMANCE
- The control circuit consists of quality electronic parts.
- The control circuit is well-planned for easy maintenance.
- Dust and coolant-proof.

OIL / FLUID SEPARATION DEVICE (OPTIONAL)
The coolant tank is available to equip with an oil/fluid separation device that prevents coolant deterioration and odor.

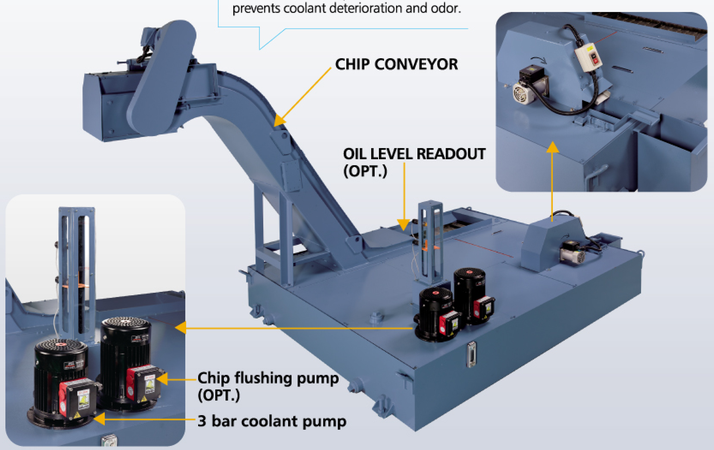

Specification:

MODEL		Unit	EVL-12	EVL-16
Capacity	Max. swing diameter	mm	Ø1,600	Ø2,000
	Max. turning diameter	mm	Ø1,600	Ø2,000
	Distance from bite holder end to table surface	mm	0 ~ 1,205	0 ~ 1,630
	Max.turning height	mm	1,200	1,600
	Max. workpiece weight	kg	8,000	10,000
Spindle	Table diameter (Manual chuck)	mm	Ø1,250	Ø1,600
	Range of table speed	rpm	1 ~ 312	1 ~ 256
	Change gear speed		2 steps	2 steps
	Max of Table torque	N.m	12,400	18,400
ATC	ATC (Automatic Tool Change)		1 set (12 pocket)	1 set (12 pocket)
	Number of position	ea	12 position / Random	12 position / Random
	Tool size	mm	□25 □32 □40	□25 □32 □40
	Cross-section of ram	mm	200 x 200	240 x 240
Feed	Rapid rate (X-Axis)	m/min	10	10
	Rapid rate (Z-Axis)	m/min	10	10
	Horizontal traval (X-Axis)	mm	-820 +1,000 (Ref. point)	-1,020 +1,220 (Ref. point)
	Vertical traval (Z-Axis)	mm	900	1000
	Cutting feed rate	mm/rev	0.001 ~ 50	0.001 ~ 50
	Feed override	%	0 - 150	0 - 150
	Cross-rail travel	mm	500, 2 steps(3 positions)	750, 3 steps(4 positions)
Motors	Table main motor(cont./30 min.)	kW	AC 37 / 45	AC 45 / 55
	Feed servo motor(X/Z axis)	kW	AC7kW / AC7kW	AC7kW / AC7kW
	Power requirement	kW	100	120
Machine size	Floor space (LxW)	mm	6,230 x 4,875	6,940 x 5,500
	Max . Height (H)	mm	5,078	5,550
Weight	Net. Weight	kg	22,000	28,000

- All specification, design and characteristics shown on this catalogue are subject to change without prior notice.

Standard Accessories
1. Complete splash guard and safety door
2. Hydraulic unit
3. Table manual 4-jaw chuck
4. Automatic lubrication system
5. Work light
6. Three color warning light (R/Y/G)
7. Workpiece counter (FANUC)
8. Coolant through tool holder
9. Heat exchanger for electrical cabinet
10. Gear / bearing lubrication and oil cooler control
11. Service tool box & tool kits
12. Leveling adjustable block and seat pads (without J type bolts)
13. Chip conveyor
14. Chip trolley
15. Moveable vertical crossrail and mechanism
16. Coolant system with tank (3Bar)

Optional Accessories
1. Air conditioner for electrical cabinet
2. Transformer for power source 220V,380V,440V
3. Oil Separator for coolant
4. Tool holder (ATC device)
5. Special bite holder
6. Tool measuring device
7. Linear scale for X & Z axis (closed loop control system)
8. High pressure coolant pump (6Bar)
9. Conversational screen display language
10. Jig & fixer model design
11. APC (2pallet/2station)
12. APC (2pallet/3station)
13. Splash guard of auto door
14. Oil level readout
15. Flushing chip system
16. FANUC 18iTB/32iTA controller

L&W MACHINE TOOLS, INC.
Factory: No. 53 Ho Tso St., Feng Yuan, Taichung Hsien,Taiwan
Export Office: 9F-8, No. 62, Ta Ya Road, Taichung, Taiwan
Tel: +886-4-2201-4701 Fax: +886-4-2203-6013, 2207-0371
http://www.lw-machinetools.com E-mail: lwmachin@ms31.hinet.net

Best Innovation, best MiTEAM.

L&W MACHINE

Heavy Duty CNC Vertical Lathe *EVL series*

cyclone®

Rugged Machine Construction a Guarantee of Rigidity and Stability

- The structural parts, such as base, table, columns and beam are all manufactured from high quality cast iron, stress relieved for deformation-free performance year after year.
- Oversized box ways on X, Z-axis enhance perfect stability.
- All structural parts are rib reinforced to increase structural strength and rigidity.
- All slideways are hardened, precision ground and coated with Turcite-B to ensure maximum resistance.

WEAR-RESISTANT BEAM

The slideways on the beam are fitted with alloy steel to increase wear-resistance capability.

WALL-TYPE COLUMNS

The columns are wall-type construction that dramatically upgrades the rigidity of columns.

AUTOMATIC TOOL CHANGER

- The loading capacity of the magazine is 12 tools.
- The magazine rotation is driven by a servo motor, featuring fast and high positioning accuracy.
- Tool selection method is bi-directional and random for increased efficiency.
- The tool magazine is separately mounted from the cutting area, combined with a safety door to fully prevent cutting tools from pollution by chips or coolant.

TABLE DRIVE GEARBOX

- The table rotation is transmitted through a gearbox, providing high / low speed ranges.
- A forced circulated lubrication system is used for lubricating gears.

BEAM POSITIONING RACKS

- The beam positions on two rails with 2 steps(3 positions) on each rail, and is clamped securely by hydraulic power.
- Accurate perpendicularity between two clamping head is achieved through additional stops.

HYDRAULIC-DRIVE BEAM ELEVATION

- The beam elevation is driven by two hydraulic cylinders.

Z-AXIS SLIDING PARTS

- Turcite B is fitted on all sliding parts of Z-axis. Forced lubrication system is provided for X & Z axis. Lubrication to each part is performed by timer cycle (30 min) after power on.

TABLE MANUAL FOUR JAW CHUCK

SHORTED TAPER MOUNTED

The chuck is mounted into a short-nose spindle for added stability and high centering accuracy.

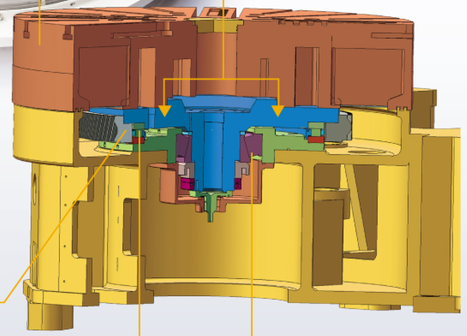

TABLE DRIVING GEAR

The table rotation is transmitted through a heavy helical gear. It is precision machined from nickel-chrome molybdenum alloy steel, hardened and precision ground for maximum wear resistance and high accuracy.

TABLE BEARINGS

Thrust roller bearings provide excellent loading capacity for workpiece and table and greater cutting force resistance.

TAPER ROLLER BEARING

Taper roller bearings enable table runs stably and resist cutting force.